Coping with Shortage and Chaos:

Truck Cargo Transport in the Eastern Bloc, 1950-1980

Icon –Journal of the International Committee for the History of Technology, Vol. 22, 2016, no. 1, pp.126-146

Richard Vahrenkamp

This article explores tensions during the Cold War between the need to have infrastructure to enable truck transport in the countries of the Eastern Bloc and the restrictions the 'shortage economy' imposed on investments in infrastructure. Outsourcing, the use of external truck transport service providers by manufacturers and other enterprises, began in the Eastern Bloc in the 1950s along with new forms in the organisation of truck transport, such as 'swap traffic' or 'encounter traffic'. However, conflicts between authorities that competed to oversee truck transport led to chaos in the overall transport sector and to deterioration in quality of service.

INTRODUCTION

The case of cargo transport by trucks in the Eastern Bloc nations of Europe involved the transfer of technology between East and West. The technology of truck transport was developed between 1900 and 1930, when the diesel engine was introduced, and it gained momentum in the 1950s in both East and West Europe. This historical development raises several questions about truck cargo transport in the East. On what kind of infrastructure did truck technology depend? Under what conditions did truck fleets operate in countries of the Eastern Bloc? Did the East develop special innovations that were an antitype for trucking the West? Could the Eastern Bloc fully exploit the advantages trucking offered for the industrial division of production, such as the economies of scale and learning curves resulting from specialisation?[1]

While studies about the railway system in the German Democratic Republic (GDR) are numerous,[2] the issue of truck transport in the Eastern Bloc has drawn little scholarly attention. In 1978 and in 1980, Bogdan Mieczkowski published volumes on Eastern European transport, focusing on roads, trains and cars. One small chapter dealt with agricultural transport in Poland. Reinhold Bauer published, in 1999, a study on the automobile industry in the GDR but left the subject of truck transport unconsidered. In his study *Cars for Comrades* from 2008, Lewis Siegelbaum pointed out the Soviet Union's lack of road infrastructure and outlined the debate on 'roadlessness', thus implying that long distance transport by truck played only a marginal role in the Soviet

Prof. Dr. Richard Vahrenkamp (vahrenkamp2016@gmx.de), Logistic Consulting Berlin Trendelenburgstr. 16, D-14057 Berlin.

Union and that truck transport was conducted only in the vicinity of major cities. Indeed, in the 1950s, about 50 per cent of Soviet trucks were concentrated in the capital of Moscow. In his paper 'Little Tsars of the Road: Soviet Truck Drivers and Auto-Mobility, 1920s-80s' delivered at the conference 'Cars in Socialism', Moscow 2008,, Lewis Siegelbaum explored the public images of truck drivers in the Soviet Union. He examined the four types of truckers in both the official and the popular imagination: heroes, professionals, loners and wheeler-dealers. Other conference papers addressed cars but not trucks.[3]

This article analyses Eastern Bloc economies by embracing and following the Hungarian economists János Kornai and Martin Kragh in identifying 'shortage' as a defining feature of state socialist economies. To overcome the bottlenecks in the procurement of material, enterprises either had to procure material from black market sources through special agents or turn to corruption. According to Kragh, the idea of a shortage economy 'allows scholars of command economies to organise observed phenomena, such as delays, production stoppages, spoilage, low productivity and inefficiency, into a single coherent framework.'[4]

COMMITTEE OF TRANSPORT MINISTERS IN THE EASTERN BLOC

Until 1955, railways served as the most important carrier for cargo transport in many countries in the Eastern Bloc. An exception was Bulgaria, where trucking had a share of 80 per cent because of the lack of railway links.[5] After 1955, a shift began towards trucking technology in the Eastern Bloc. The papers in the journal of the Committee of Transport Ministers in the Eastern Bloc (OSShD), founded in 1957, reveal that this organisation pushed the shift toward trucks.[6] And, their meetings reveal tensions with the transport section of the Council for Mutual Economic Assistance (COMECON) in the Eastern Bloc.[7] While the Committee mainly coordinated railway policy among the member states, the committee's Commission XI was charged with the formulation of road policy and truck policy. The commission stated the importance of delivery by truck because such transport made door-to-door delivery of cargo possible without transhipment of the freight. Truck service was seen as faster than railway delivery and establishing a road network for truck services would require less capital investment than a railway network.[8] Truck transport seemed to be tailor-made to cope with the growing segment of packaged goods that consisted of machinery parts, spare parts and consumer goods (e.g., canned food). This assessment of truck transport was the same as in the Western word. The 22nd convention of the Communist Party of the Soviet Union (CPSU) in 1961 heavily pushed car transport and truck transport. It envisioned a network of motorways from Moscow to the capitals of the districts and other republics of the Soviet Union – a network that was never built.[9]

Part of the problem was that railway network relied on an existing technological infrastructure that supported its operations: sheds for locomotives, locations for supply of water and coal, recreation rooms for the locomotive crews, shops for repair, and so forth. The shift toward the trucking technology required a new infrastructure similar to but distinctive from that of railways:

- a network of roads and motorways,
- locations of truck yards, where the trucks had parking lots in the night,
- sheds for trucks to provide shelter against weather conditions,

- recreation rooms for the drivers,
- facilities for care and maintenance,
- repair shops,
- a network of warehouses for storage of spare parts and their delivery for truck repair.

But in the economy of shortage characteristic to the Eastern Bloc, this new and additional infrastructure was never sufficiently provided. When there were no sheds in the parking yards to protect the trucks against frost in the winter, for example, little ovens beneath the trucks had to keep the motors warm.[10] Thus, the state socialist countries did not earn to any great extent the advantages of truck transport, and railways continued to haul the majority of cargo.

The Eastern Bloc coordinated national economic policies through COMECON, and the council offered a platform to resolve cargo truck issues, such as the fact that trucks were built in various countries of the Eastern Bloc in a broad variety of models. This mix of many models in truck fleets required different spare parts for maintenance, and it was difficult to supply such parts to repair shops. Figure 1 illustrates the variety of models of VEB Kraftverkehr Greiz in the GDR at the beginning of the 1970s.

Figure 1. Broad variety of truck models in the parking yard in 1971. Source: http://www.vogtlandspiegel.de/100-jahre-busverkehr-im-landkreis-greiz (accessed on 25 Nov 2015).

Questions discussed at COMECON meetings included whether the variety of trucks should be restricted to simplify the maintenance and spare part storage and thereby earn the advantages of an economy of scale – an obvious approach in a centrally organised state socialist economy. Should only one truck model for each class of loading capacity (1 ton, 3 ton, 7 ton, 12 ton) be obligatory for all countries in the Eastern Bloc or at least obligatory in each country in the Eastern Bloc? In addition, in which country should this standard truck be built? Which country should gain production; which one should lose? If this could be resolved, it was thought, the rationalisation in truck-model policy could prove the superiority of the state socialist economies over the Western capitalist

economies. But coordination was not applied by COMECON to the production of trucks, and the council's resolve to coordinate this never moved beyond declarations to be implanted as national policies.[11]

Strong economic interests for building trucks existed in every Eastern Bloc country. For example, the GDR, which had been building the one-ton delivery van Barkas since 1957, started in 1965 to build the W50 truck (see figure 2) with a five-ton load capacity in a newly erected factory in Ludwigsfelde close to Berlin (see figure 3). This was a truck that the GDR could export.

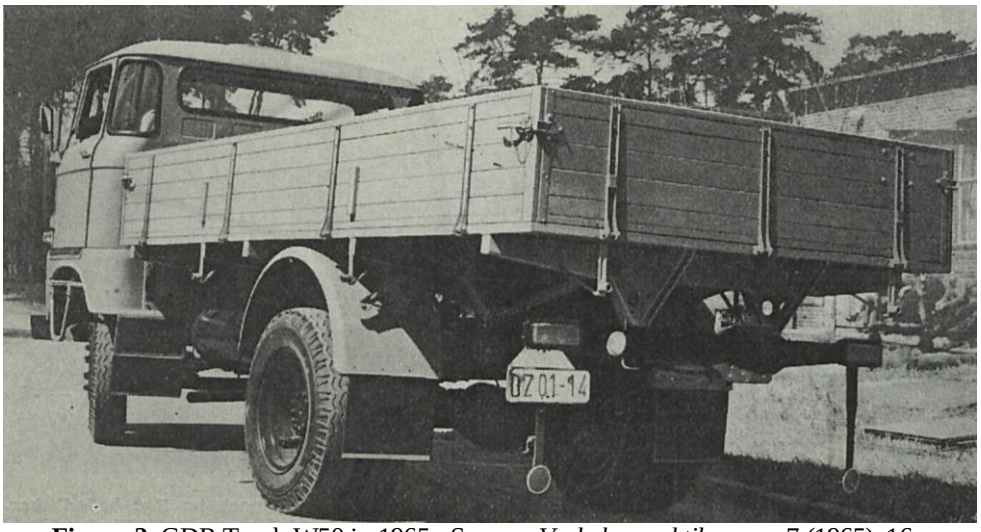

Figure 2. GDR Truck W50 in 1965. Source: *Verkehrspraktiker*, no. 7 (1965): 16.

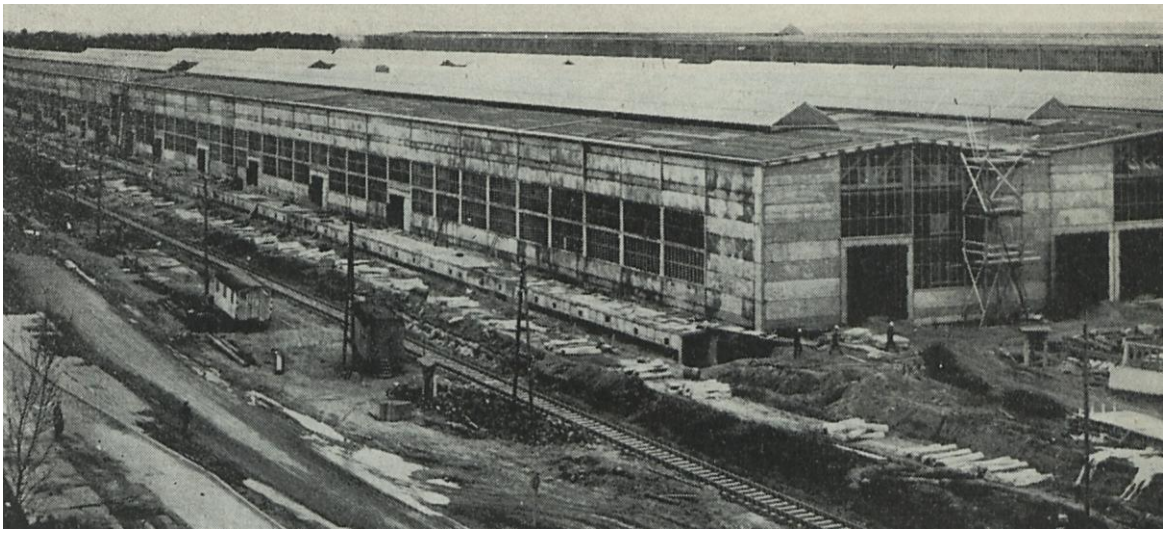

Figure 3. W50 plant in Ludwigsfelde 1965. Source: *Verkehrspraktiker*, no. 7 (1965): 15.

Commission XI also underscored its view that international truck traffic crossing the border inside the Eastern Bloc would become more and more important.[12] The commission discussed the acceptance of driver licenses in other countries, the importation and storage of reserve truck fuel at countries' borders, the provision of insurance, and the supply of fuel and lubricant in the foreign countries – an important question in economies of 'shortage'. Cross-border truck traffic towards Western countries was important if the export of high-valued finished goods was to earn hard Western currency. But how would

maintenance be provided for trucks when they were abroad? There was no Western European network of repair shops with the necessary 'Eastern' spare parts for trucks produced in the Eastern Bloc. Hungary solved this problem by employing a fleet of West-German Mercedes trucks for the sole purpose of getting exports outside the Eastern Bloc.[13]

For long-term planning in road construction, Commission XI prepared in 1969 to count the traffic occurring in 1970 within Eastern Bloc countries and also count the cross-border traffic within the Eastern Bloc as a whole. For the GDR, they estimated traffic density per day on the road network and assumed a peak value of 5,000 units (car, motorbike, bus, truck). In other countries they could only make such an estimate in the vicinity of the largest cities. For three days in August 1970, the commission counted cross-border traffic (the data are displayed in figure 4). The main traffic was between Hungary (H) and Czechoslovakia (CS) with a share of 39 per cent, Hungary and Romania (R) with 15 per cent and Czecholsovakia and the GDR with 14 per cent. The Trianon Treaty that formally ended World War I between most of the Allies gave two-thirds of Hungary's territory variously to Romania, Yugoslavia, Croatia, Slavonia, Slovakia, Ukraine and Austria. Thus, much of the traffic density between Hungary, Romania and Czechoslavakia is explained by the close ethnic ties of these populations in former Hungarian territory. Notable in Figure 4 is the low traffic density at the border with the Soviet Union; despite its great economic importance to the Eastern Bloc, it had a particularly weak car culture.

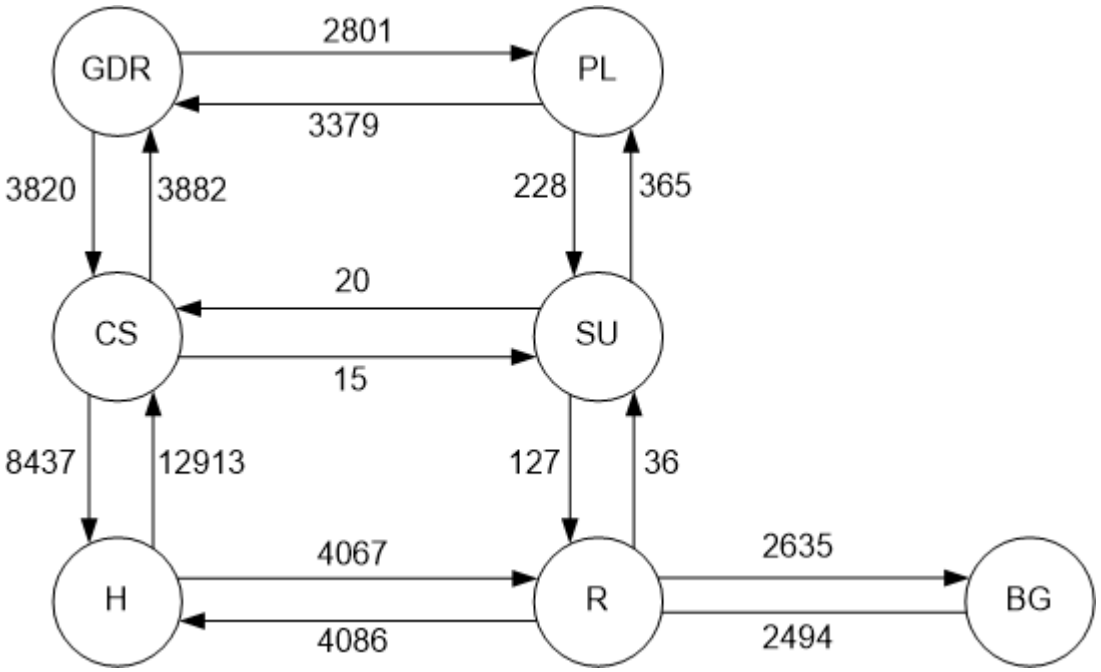

Figure 4: Cross border traffic inside the Eastern Bloc 1970. From: Tamas Fleischer, et al., 'Erste internationale Verkehrszählung auf den Strassen europäischer OSShD-Mitglieder', *OSShD-Journal*, no. 6 (1974): 2.

Commission XI served also as a platform to introduce new concepts of truck delivery developed by the transport ministry of the Russian Socialist Republic (RSFSR) and in all countries of the Eastern Bloc. Examples are encounter traffic and the dissolution of enterprise-truck fleets and their centralisation in large public forwarder enterprises, which will be discussed below.

STRUCTURE OF TRUCK TRANSPORT IN THE EASTERN BLOC

When one observes a truck on the move, the truck can be employed in two modes that are hidden from the observer. The truck can belong to a truck service company (a 'forwarder') conducting transport and delivery for customers of an industrial enterprise, or the truck may be operating as part of an industrial enterprise's own truck fleet. To deliver products or merchandise to a customer, an enterprise essentially has two choices: either to give a transport order to a forwarder or transport the goods by one's own truck fleet ('transport on own account'). In many cases, based on the cost of transport alone, a forwarder is cheaper than transport by one's own fleet because the forwarder can make better use of truck capacity by bundling several orders with a similar destination into one shipment; however, the effect of bundling only occurs in long distance transport. For local trips, the economic advantage of bundling vanishes – as the broad debate on logistic solutions for city delivery in the 1990s shows.[14] Whereas in the GDR privately owned providers survived with a market share of about 10 per cent, in the Soviet Union all provider firms were owned and run by public authorities on the local, regional, state or federal level.

State socialist traffic planners in the Eastern Bloc saw this problem as evidenced in their discussions 1950 to 1990. When an enterprise delivers products to a customer with its own truck and the truck returns without a load ('dead mileage'), it loses an economic advantage. A truck operated by a forwarder, however, could collect cargo to haul on the way back (if the load is available), thus making this leg of the journey profitable. On the other hand, enterprise trucks have advantages in local delivery that come from the close ties between production and transportation – for example in the construction trade – as well as gains that induced by immediate delivery and a closer relationship with customers. Here forwarder truck fleets lose the advantage they have in long-distance transport – their capacity to bundle cargos.[15]

In their political statements, transport ministers in socialist countries often made the accusation that brutal competition and chaos ruled the transport sector in capitalistic countries, whereas in socialist countries the different carriers (i.e., ship, railway, airplane, car, bus and truck) were coordinated and operated according to uniform principles of the socialist economy.[16] In the case of railway carriers, it was not difficult to govern the railway in a socialist manner, for the railway represented the same hierarchical organisation as the Communist Party. When the communists came to power in Eastern Europe after 1945, they only had to exchange existing railway management with loyal comrades. But a different situation existed in the case of trucking. Although trucks need infrastructure, unlike railways they did not constitute a 'system' characterised by uniform norms in technical equipment and operations based on voluminous instruction manuals. Rather, trucking operations were completely decentralised with mixed equipment and different modes of operation. Every industrial enterprise and every local or regional authority could employ a truck fleet, and every ministry could establish its own forwarder fleet. In contrast to the state's assertion that the different carriers in social countries were coordinated and operated according to uniform principles, a struggle existed among different ministries and enterprises in the trucking segment of traffic policy over how to conduct trucking to serve their interests. Indeed, real chaos existed in the trucking segment with the uncoordinated coexistence of enterprise fleets, of 'public forwarders'(set up by the transport ministry, see below) and of 'sector forwarders' (set up by sector ministries, see below). These parallel structures prevented trucks from be fully

loaded and induced many dead mileage trips as well as a shortage of capacity in the autumn harvest peak. Uneconomic parallel structures in the network of repair shops and spare-part delivery appeared and aggravated the shortage of spare parts.[17]

The Soviets quickly discovered that the formal structure of truck traffic was different in the Eastern Bloc. In the Soviet Union many enterprises were centrally led by ministries of the different economic sectors: mining, steel production, machinery production, agriculture, food production, wholesale trade and retail trade, construction and railways. These ministries operated their own trucking companies, which served as forwarders for enterprises in their sector, and in the construction industry there was even a special transport ministry.[18] Additionally, each enterprise could employ its own truck fleet so that the enterprise did not have to depend on the sector forwarder. Independent of this structure, the transport ministry of the RSFSR operated its own truck forwarder enterprises in different cities. These trucking services, started in 1951, were called 'public' truck services. Every enterprise, regardless of its sector, could call for a public truck, and the public-truck service also was responsible for local delivery at railway stations. Railway wagons had to be loaded and discharged, and the cargo had to be shipped from or to the railway station, so the local truck service linked the carrier railway with the road network. In 1956 in the Soviet Union as a whole, the public-truck transport carried 276 million tons of cargo. In Moscow, it carried 65 per cent of construction material, 23 per cent of the goods for the retail trade and 70 per cent of the local traffic for the railway. The costs for each ton per kilometre were below the cost of company fleets by 28 per cent.[19] In general trucking assumed a more important role compared to railways in the Soviet Union. The number of railway transport nodes where cargo could be transhipped was reduced by 60 per cent in the 1950s. Transhipping points that handled fewer than six wagons per day were closed, and the average distance between two adjacent nodes was doubled from 10 km to 20 km; the ensuing gaps of service were compensated by truck transport.[20]

Although in the Socialist Republic of Hungary the same structure existed as in the Soviet Union – company fleets had, in 1960, a share of 52 per cent of tons of freight, public forwarders 30 per cent and the sector forwarders 18 per cent[21] – this pattern did not follow elsewhere in the Eastern Bloc. For example, the Socialist Republic of Poland administered the counties Gdansk, Krakow, Lublin, Poznan, Szczecin, Warsaw and Wroclaw. The industrial enterprises led by the counties had company fleets of 150 to 600 trucks each. The company fleets had, in 1964, a share of 70 per cent of tons of freight shipped by truck, whereas public forwarders had only 10 per cent and sector forwarders 20 per cent. Public forwarders were organised in a hierarchical manner like the Communist Party – the central office was located in Warsaw, the regional offices in the main towns of the counties and, at the lowest level, there were offices in regional towns. Moreover this structure was split in two branches: the pure forwarder branch, called PSK (Domestic Forwarder Company), and the PKS (State Automobile Communication). The PSK concluded the contracts with the customers, issued bills and provided insurance, but it did not operate its own trucks. The PKS existed as a parallel structure with PSK, received its orders from the PKS and operated the trucks. It was responsible for the truck yards, for care and maintenance, for repair shops and assignment of the drivers. The fragmentation in Poland's truck sector is evident and contained many possibilities for problems in operations and deterioration in delivery service.[22]

In all the Eastern Bloc countries company truck fleets accounted for a high proportion of truck transport performance as measured in tons per kilometre. Because of the shortage economy the necessary infrastructure for truck transport was not sufficiently constructed.

Roads were bad, causing truck maintenance problems, and trucks were idle because of an insufficient supply of spare parts. For example, in Poland during the 1970s, 25 per cent of all truck capacity remained out of service because of a shortage of spare parts. Fleischer reported that even a decade later in 1986 only one third of county roads in Hungary were capable of supporting truck traffic.[23] Shortages and poor roads resulted in deliveries being late and partly damaged or spoiled cargo. Because shortages and a weak division of labour division characteristic of state socialist economies and the inability of Eastern Bloc enterprises to access a reliable network of suppliers,[24] enterprises developed internal supplier relations via vertical integration ('Kombinat'). And, as one element of vertical integration, they employed own truck fleets to avoid the trap of poor service provided by the socialist public-trucking enterprises. GDR transport ministry officials regularly noted the high share of ton-per-kilometre traffic that company trucking fleets held in the GDR and interpreted this share as 'disproportionally high'. They almost seemed unaware that this was a consequence of the shortage economy, yet delegates to the Commission XI implicitly recognised the problem by discussing new ways to get road construction materials, even by slowing industrial production, and they regularly sought ways to speed acquisition and distribution of spare parts for trucks.[25]

OUTSOURCING TRUCK TRANSPORT IN MOSCOW, THE RSFSR AND THE GDR

The 20th party convention of the CPSU in Moscow in 1956 became famous when party leader Nikita Khrushchev accused Stalin of despotism; but, at this same convention, Khrushchev also promoted new organisational concepts for using passenger cars and trucks.[26] As former party head of the Moscow district, Khrushchev knew very well the special circumstances of Moscow's transport sector and the coexistence of its many uncoordinated truck fleets in enterprises, authorities and organisations. At the convention, he stated that the truck fleets in Moscow were highly fragmented and declared that if the state-owned enterprises would consolidate their fleets of trucks enormous hidden truck capacities would be unleashed.[27] All that the state had to do, he argued, was to withdraw trucks from enterprises and concentrate them into separate public-transport service enterprises. State socialist planners also claimed that truck capacity was used more efficiently in large-scale enterprises compared to individual enterprises. They dreamed of large-scale truck enterprises concentrating between 200 and 500 trucks, which would lead to 'economies of scale' and result in low unit costs in truck transport. They put this policy in action throughout the Soviet Union and felt transferring enterprises' truck fleets to public-transport service enterprises was an important trucking sector innovation and should prove the superiority of socialism over capitalism. In the West, management called the policy to transfer companies' truck fleets to forwarders 'outsourcing', and it is interesting that Soviet state socialist planners put this policy in action in the 1950s, a full 30 years before Western management started to 'outsource' truck services. Moreover, they used a more radical approach than their Western counterparts and did so without any theoretical insight into business processes.

Whereas outsourcing of truck fleets in Soviet Union became obligatory, it was left to the discretion of management in the West. The outsourcing movement in Western management started in the 1980s, and not only were logistics services outsourced, but also computing and administration services, such as billing. Nonetheless, the outsourcing movement by Western management was only partial and not as radical as it was in the

socialist states. Western management acted very cautiously, and before a service was outsourced, business partners entered into long negotiations, which led to the advantages and risks of outsourcing being precisely described in comprehensive contracts.

The law of economies of scale, on which Khrushchev's transport policy was based, is established theory in capitalist societies and explains the strong decrease in unit costs when the scale of a factory expands – at least in capital-intensive process industries.[28] State socialist politicians declared this law as central to their Marxist-Leninist ideology.[29] While they observed that small-scale production still existed in many private sectors – for example in agriculture, handicraft production and the construction industry – the tendency toward large-scale production was an inevitable step in the march of history. State socialists sought to connect this theory to reality and assumed therefore that this law would apply equally to service industries such as transportation; but they did not fully consider the possible results.

In the 1950s, a policy aimed at concentrating truck enterprises also was put into action in Moscow, where 50 per cent of the Soviet Union's truck fleet was based. Experiments concentrating truck yards with up to 1,000 trucks were carried out.[30] In order to determine the peculiarities of three enterprise sectors – construction, retail shops and industry – the local Moscow Soviet established a special administration for truck transport that was split into three parts, each dealing with one of these enterprise sectors. The administration operated enterprises for truck transport that were called 'centralised transport'. By itself, the part for construction operated 25 enterprises for transport. The truck 'Kombinat Number 1' possessed 1,100 trucks (including trailers) that were peripherally located to reduce dead mileage. The number of truck fleets in Moscow dropped from 5,000 in 1950 to 2,000 in 1958.[31] This was seen as rationalisation of the transport sector, as well as clearing traffic jams at Moscow's railway cargo terminals. Instead of 5,000 trucks emerging each day from local industry and wholesale warehouses at the railway cargo terminals, the policy of centralised public transport decreased this number to 1,500 trucks.[32] This centralisation of cargo terminal transports was an innovation that was also discussed in Germany since 1880, but never implemented.[33]

When central public transport was enforced in Moscow this changed the balance of power in trucking. Enterprises in construction, retail trade and industry gave up their truck fleets and became dependent on the public-truck service, which became a monopoly. Unfortunately, this made urgent deliveries by enterprises impossible, and late deliveries incurred economic losses. While poor service resulted in long queues for service, the public-truck service achieved a high degree of capacity utilisation that served – absurdly – as justification for public transport.[34] The policy stirred resistance, and enterprises with large political influence, such as 'Metro Construction' and 'Academy Construction' in the construction sector, kept their fleets. Additionally, industrial enterprises with 'special products' kept their fleets.[35]

One can assume that centralised public transport weakened the quality of transport service in terms of punctuality and quantity of construction material that was delivered to the construction sites. Unfortunately there are no empirical studies to substantiate this assertion. Herbert Krunau's account transport in Moscow's construction sector highlights some points of bad service in the GDR construction sector that may have applied to Moscow. He notes about the GDR that:[36]

- transport enterprises had to fulfil every order and not pick only easily fulfilled orders (GDR enterprises denied transporting small orders, such as urgently needed spare parts, because such orders did not afford a full truck load and did not accord

to their goal of maximising transport volume in tons or haulage capacity in tons per kilometre);

- transport had to be punctual, which hints at unpunctual transports;
- if a truck failed to operate, the incident had to be communicated to the dispatcher immediately, which hints at delayed communication;
- material had to be transported to the sites that had been notified to expect the delivery, which suggests the existence of some black-market operations delivering cargo to other sites.

Because transport is a local activity, decentralised organisation of transport provided the best flexibility, but communist traffic planners did not take this into account when they centralised transport orders in Moscow's Soviet. As Krunau suggested, the centralisation in Moscow's administration of transport management for the construction sector could induce delay in the fulfilment of orders.[37] One can assume that some thousand transport orders for construction material each day had to be communicated from the construction sites to the construction material wholesale organisation and from there to the central transport administration in the Soviet. The latter had to transfer these orders to one of the 25 transport enterprises, where the orders were carried out by transporting construction material from a particular factory to a prescribed construction site under the supervision of local dispatchers (see Figure 5). However, it is unknown how the communication of the transport orders was processed. Were they sent by telephone (quick, but inclined to errors), message boys, telegraphy or postal letters (slow communication)? The system of transport orders sketched so far perhaps would be feasible in the year 2000 with the technology of internet communication and computers, but if one imagines some thousand orders, each one on a paper sheet, on the desk of the central administration to be processed each day, one can conclude that delays and errors were likely. The writer Inbert Gobermann also mentions that delays were induced by the centralisation of the truck yards, and he called for more local yards to respond quickly to transport demands of the construction sites.[38]

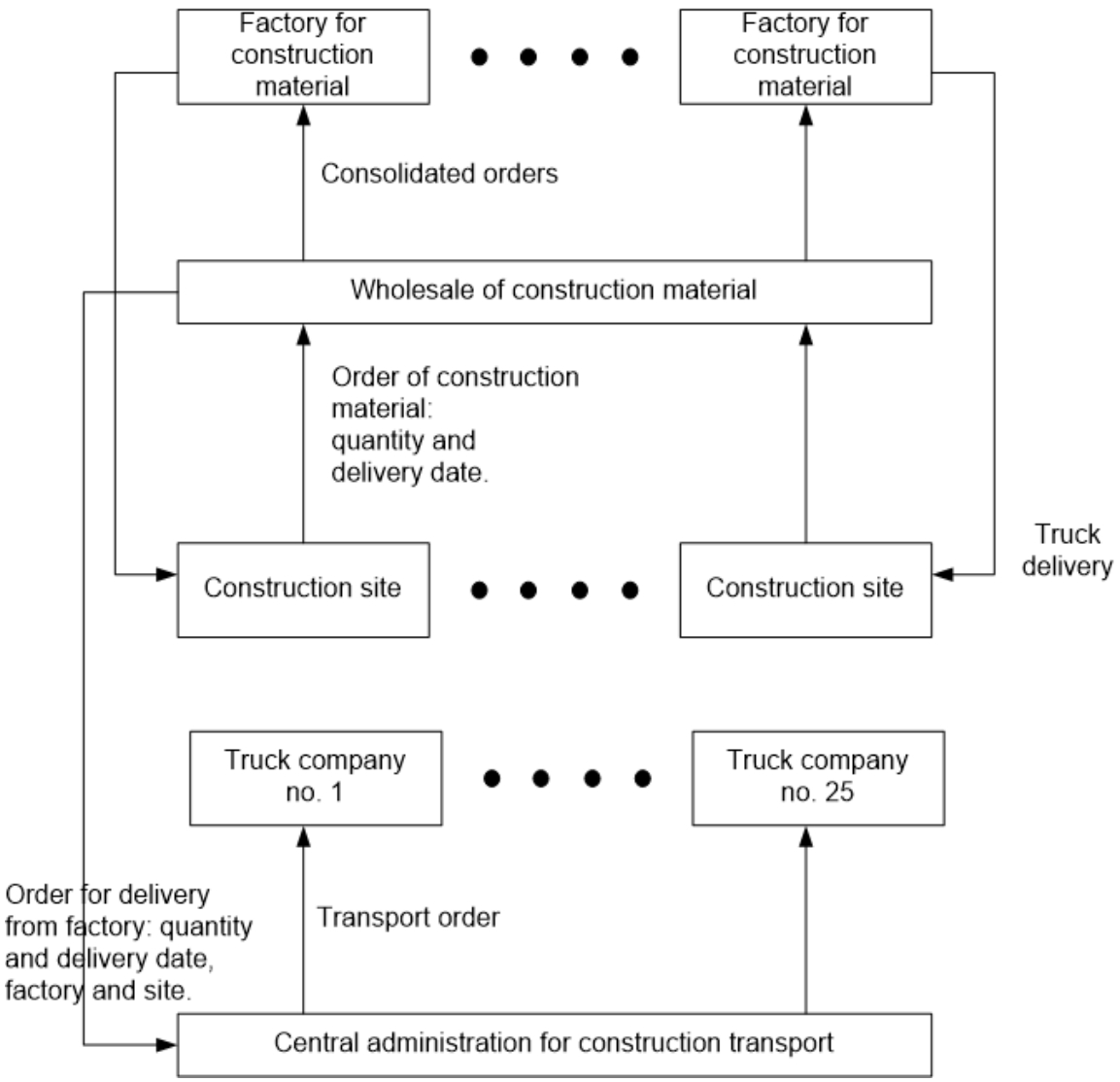

Figure 5. Flow of orders in Moscow's construction industry. By author.

In the RSFSR, the public-truck transport was introduced in 1951, and its share of all cargo transported was 40 per cent by 1959. During this period about 50,000 trucks were transferred from enterprise and authority fleets into public transport fleets. There was some uncontrolled growth of public transport enterprises, so in some cities there existed different and uncoordinated public transport enterprises. Ultimately, the RSFSR ministry of public-truck transport centralised these enterprises to one enterprise in each city.

The ministry also started public long-distance truck transport routes in 1957 between Moscow and Rjasan and Moscow and Kalinin, and by 1960, they had established 81 such routes.[39] The ministry also introduced the concept swap-traffic or encounter traffic to long distance routes.[40] For example, if a driver operated a truck over the long distance of 725 km between Moscow and St. Petersburg (Leningrad), s/he needed several stops for rest and overnight stays. The swap or encounter traffic concept divided the long distance route into several sections of between 130 km to 230 km:

1. Moskau – Kalinin, 169 km

2. Kalinin – Wolotschok, 131 km
3. Wolotschok – Nowgorod, 231 km
4. Nowgorod – St. Petersburg, 194 km

When a driver reached the end of one section, for example Kalinin, s/he met with a driver and truck coming in the opposite direction from the starting point of the next section, in this case Wolotschok. With all trucks fitted with the same trailer systems, such as the 14-ton capacity MAS 504 trailer truck (see Figure 6), the drivers simply swapped their trailers and returned to their starting points. Thus, in the evening the driver reached her/his home base and returned to her/his private home.

Figure 6. Trailer Truck MAS 504 in 1965. Source: *Der Verkehrspraktiker*, no. 4 (1966): 19.

To achieve the encounter traffic goals, trucks had to drive according to a tight time schedule and timely repair service had to be provided to guarantee punctual arrival. Only under these conditions, which were not easy to manage in an economy of shortage, were drivers able to meet at the swapping points without long delays. The transport time for cargo between Moscow and St. Petersburg was reduced from two or three days to 23 hours by this method, and truck traffic, which was only two trucks in each direction in 1960 rose to 28 trucks in 1966. Figure 7 provides a schematic illustrating the encounter system in the RSFSR.[41]

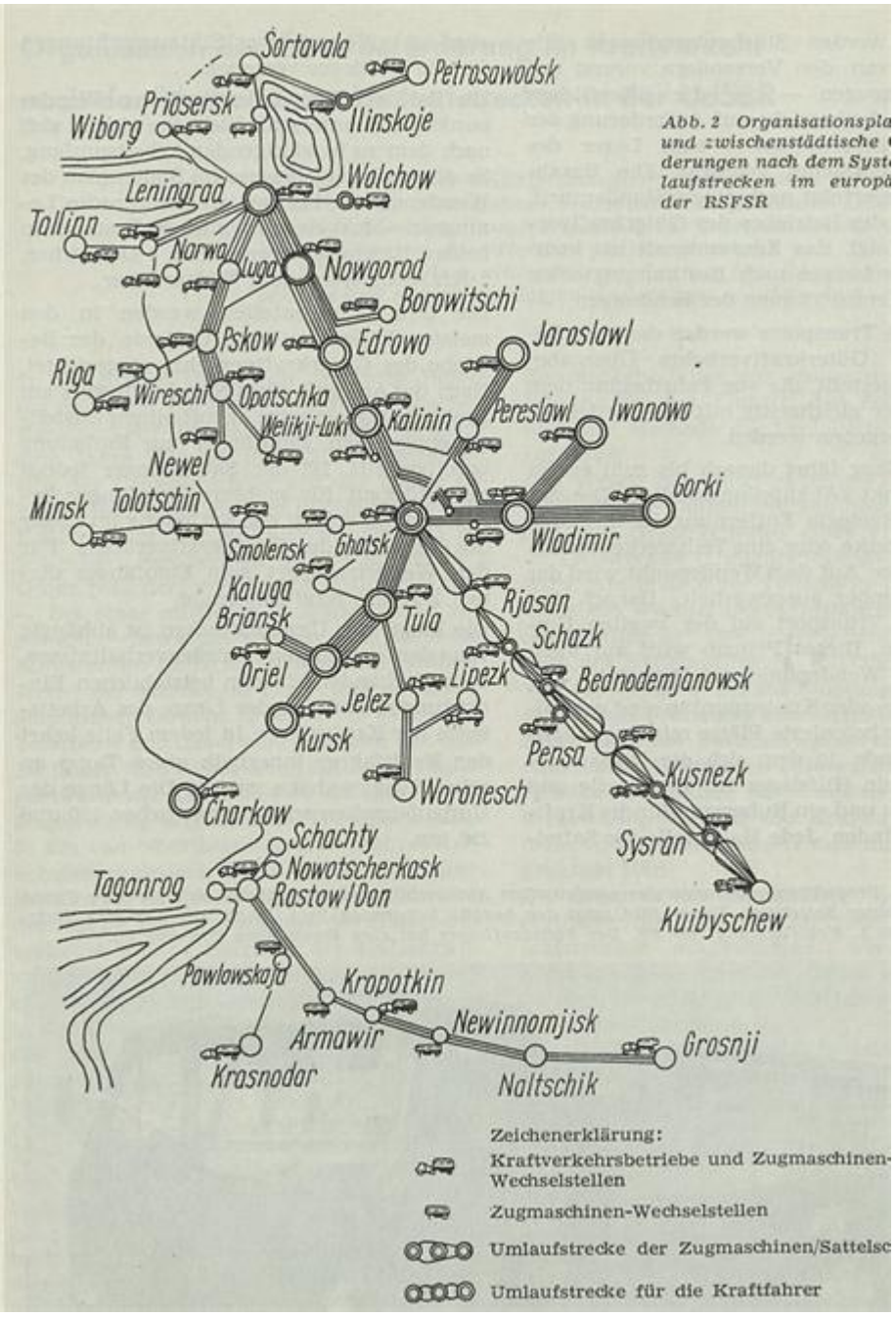

Figure 7. Encounter Traffic in the RSFSR. Source: Tschernjawsk (endnote 41)

In the GDR there were not only centrally led enterprises, but also regionally led ones, which makes it possible to identify truck transport issues at a regional level. But GDR sector ministries did not employ their own truck-forwarder enterprises. In 1959, public-truck transport had only a 19 per cent share of overall truck transport (measured in tons per kilometre).[42] Officials in the primary transport ministry took pains to point out the better capacity utilisation achieved by public-truck transport versus enterprise-truck fleets.

At the first glance, despite completely different institutional settings, there were many similarities in traffic policy during the 1950s and 1960s between the GDR and West Germany. As heirs of the Nazi era, the GDR had a dense autobahn network connecting important cities within the Saxonian industrial belt and with the capital of Berlin. The GDR expanded its autobahn network with new highways: between Leipzig and Dresden

in 1971 and between Berlin and Rostock in 1978.[43] As in the West, the GDR also intensified the division of labour in its economy, and partly because of poor performance in railway freight transport – especially in the packaged goods sector – it gave priority to truck transport on the autobahns.[44] Many documents show that transport department officials regarded the railway as old fashioned that unable to meet modern transport requirements. Thus, railways had to be 'relieved' by expanding trucking. This position was more radical than the traffic policy in West Germany, where officials protected railways from truck competition.[45] Nevertheless, as in the West, although more slowly, the GDR changed railway traction from steam to electric power and made fragmentary rationalisation investments in cargo transport, the latter including container yards and the mechanisation of cargo transhipment with palettes, boxes, cranes and forklifts. But the fragmented and limited employment of such modern equipment meant that no seamless transport chains were established and the gains of modern logistics were not earned.[46] Then, when the Soviet Union restricted oil supply for the GDR in 1980, the GDR made a fundamental change in cargo transport, cancelling long-distance diesel-fuelled trucking and reactivating railway cargo transport.[47]

In a long series of statements in the 1950s and 1960s, officials of the transport ministry of the GDR promoted truck outsourcing, following the 'shining example' of Moscow. The trucks should be concentrated in public forwarder enterprises that were called 'VEB truck' enterprises.[48] The officials adapted Khrushchev's view of highly fragmented truck fleets and accused nationally-owned enterprises of insufficiently using their truck capacity. They reported on the supposed economic advantages of large-scale public-truck enterprises where capacity could be fully used.[49] The transport policy in the transport ministry put outsourcing in action at the end of the 1950s. The VEB truck enterprises continued to be a 'showcase' of the shortage economy. They started in the 1950s, when they emerged from very modest beginnings marked by a scarcity both of trucks and yard space. The trucks were old and workers earned low wages, leading the best to drift toward more lucrative employment. The nationally-owned truck enterprises did not have the necessary capacity for repair and maintenance work. Archival sources show that in the 1950s and 1960s there was a considerable shortage of trucks, parking spaces, workers and repair and maintenance facilities in the nationally-owned truck enterprises. Accordingly, truck enterprises could offer only poor quality service.[50]

TRUCK TRANSPORT IN A SHORTAGE ECONOMY WITH LOW PRODUCTIVITY EFFECTS

The collapse of the Eastern Bloc in the 1990s highlighted the different transportation structures in the East and West. The deep structure of specialised suppliers is a distinguishing mark of the economies in the West and contrasts sharply to the structure of the communist economy in the former Eastern Bloc. In the East, the transport infrastructure was poor, rendering just-in-time delivery impossible. No network of autobahns existed outside the GDR, except in short and unconnected strips. The Motorway Prag – Brno in the CSSR opened in 1980, and ambitious plans drawn up in the 1950s for a system of motorway routes from western Russia to central Europe failed to ever materialise.[51] Thus, no really efficient transport by truck throughout the Eastern Bloc was possible.

The state economy of the Eastern Bloc also eliminated competition, preferred heavy industry and relied on railway transportation. The economic system failed in the

production of consumer goods, leading to crisis and stagnation in the 1960s and 1970s.[52] Conglomerates of military and heavy industries (combined works) produced the largest share of consumer goods – but merely as an additional service. Therefore, production performance in consumer goods was at best poor.

Car production was also weak, a fact confirmed in the GDR by the grotesque waiting period of 13 years for delivery of a Trabant car.[53] Valentina Fava reported on the automobile sector in the CSSR, where the suppliers for car production were led by different ministries that did not seek to coordinate and thereby hampered the output of car factories.[54] According to Marius Jastrzab's analyses of car ownership in Poland, only 20 per cent of the families of white collar workers in Poland possessed a car.[55] Cars were distributed as favours by the Polish Counsel of Ministry. In Hungary, only the political elite had access to private cars,[56] and in 1964, the Soviet Union produced only 185,000 cars for a population of 170 million people.[57] A car culture with service facilities such as workshops, spare parts supply, gas stations and rest areas could not develop under these circumstances,[58] and the lack of spare parts caused available transport capacities to fall even furtherQuite simply, as Tamas Fleischer's account of the Hungarian road system concludes, meagre car production failed to transfer enough power to the car lobby for them to push forward road construction, so road networks remained in poor condition.[59] Despite the fact that the problem of the 'lack of roads' had been discussed repeatedly in the Soviet Union since the 1920s, as late as 1986, when the 27th Congress of the CPSU called for all collective farms to be permanently connected to district towns by roads, it was clear the problem remained unresolved.[60]

The Eastern Bloc was characterised by the lack of a developed consumer goods industries and associated truck-based distribution systems. The shops for consumer goods were intermittently supplied by rail, and the quality of the supply system was of secondary importance in an economy of shortage. So transport logistics characterised by speed, precision and the handling of a large variety of goods did not exist. According to the supervision authority 'Workers and Peasants Inspection', average transit times of packaged goods by train in the GDR were 17 to 58 days in the 1980s. The transport of so-called express goods in the GDR, in the conurbation of Karl-Marx-Stadt (now Chemnitz), had absurdly long running times of between 6 and 8 weeks, with many of the goods lying disorganised on platforms and exposed to the weather instead of stored safely in warehouses.[61] The Eastern Bloc was poorly adapted to the transportation requirements of high value goods. In the GDR, many consumer goods were damaged during rail transport due to the lack of shock-resistant packaging.[62] Also in the transport of unprocessed crops from fields to processing plants, Eastern Bloc logistics displayed serious deficiencies in transport, handling and storage capacity. CPSU General Secretary Mikhail Gorbachev spoke in 1986 of losses between 20 to 30 per cent in the transport chain.[63] The low rank of the transport sector in Eastern Bloc politics also was reflected in the low wages transport workers earned, and low wages compounded the sector's overall problems by attracting only the lowest stratum of workers, who assumed little if any responsibility for their work. The work force was plagued by absenteeism and such a high rate of turn over that the truck companies could not develop a reliable permanent staff.[64]

The shortage economy therefore helped induce the low level of logistical services in the Eastern Bloc as did the communist parties' Marxist fixation on production, which confined their view of the economy's infrastructure needs. Truck transportation and warehouse management were viewed as services that were secondary to production. The communist parties did not consider that only sufficient transport and storage capacity allowed for the supply of the goods required for production and that only infrastructure

services, such as truck transport, enabled uninterrupted production and therefore full utilisation use of production capacities.[65]. Nor did they seem to see that full support of these infrastructure services would lead to the structure of an economy based on the division of labour – one which could exploit economies of scale and learning curves provided by specialisation.

NOTES

[1] The concepts of economies of scale and learning curves are standard in production management, see Alfred Chandler, *Scale and Scope: The Dynamics of Industrial Capitalism. A History 1880s-1940s*, (Cambridge, MA, 1990) and Pankaj Ghemawat, 'Building Strategy on the Experience Curve', *Harvard Business Review*, March 1985. The learning curve concept was discovered in the aircraft industry in the 1930s and describes the experience that the required man-hours to assemble an aircraft of a certain type drops sharply with the number of aircraft that had been already finished.

[2] Christopher Kopper, 'Die Deutsche Reichsbahn 1949-1989', in *Die Eisenbahnen in Deutschland*, eds. Lothar Gall and Manfred Pohl (Munic, 1999), 281-319; Rosemarie Schneider, 'Das Verkehrswesen unter besonderer Berücksichtigung der Eisenbahn', in *Die wirtschaftliche und ökologische Situation der DDR in den achtziger Jahren*, ed. Eberhard Kuhrt (Opladen, 1996), 177-222; Ralf Kaschka, *Auf dem falschen Gleis. Infrastrukturpolitik und –entwicklung der DDR am Beispiel der Deutschen Reichsbahn 1949-1989*, (Frankfurt, 2011).

[3] Lewis Siegelbaum, 'Roadlessness and the path to communism: building roads and highways in Stalinist Russia', *Journal of Transport History*, 29: 2 (2008): 277-294; Bogdan Mieczkowski, *Transportation in East Europe* (New York, 1978); Jacek Romanowaki, 'Agricultural transport in Poland', in *East European Transport – Regions and Modes*, ed. Bogdan Mieczkowski, (London, 1980), 124-146; Reinhold Bauer, *PKW-Bau in der DDR – Zur Innovationschwäche von Zentralverwaltungswirtschaften* (Frankfurt, 1999); Lewis Siegelbaum, *Cars for Comrades: The Life of the Soviet Automobile* (Ithaca, 2008); Lewis Siegelbaum, ed., *The Socialist Car: Automobility in the Eastern Bloc* (Ithaca, 2011).

[4] Martin Kragh, 'The Soviet Enterprise: What Have We Learned from the Archives?', *Enterprise & Society*, 14: 2 (2013): 372. Also see János Kornai, *Economics of Shortage*, 2 vols (Amsterdam, 1980).

[5] W. Fodorow, 'Report on the first conference on road construction of the socialist countries', 4-12 June 1962 in Moscow, *OSShD-Journal* no. 4 (1962): 4.

[6] The *OSShD-Journal* was published in various languages. I refer to the German edition, published in Warsaw.

[7] The *OSShD-Journal*, no. 2 (1961): 25.

[8] György Hydassi, 'Trucking in Hungary', *OSShD-Journal*, no. 1, (1962): 12; *OSShD-Journal*, no. 2 (1962): 22-23.

[9] Nikita Chruschtschow, Rechenschaftsbericht des Zentralkomitees der KPdSU an den XXII, Parteitag der Kommunistischen Partei der Sowjetunion, Referat des Ersten Sekretärs des Zentralkomitees N. S. Chruschtschow am 17 Oktober 1961 (Berlin 1961); *OSShD-Journal*, no. 2 (1962): 22-23; Mieczkowski, *Transportation in East Europe* (n. 3 above), 298.

[10] Time Life Book, *Die Sowjetunion, Amsterdam 1988, 63.*

[11] Ralf Ahrens explored the policies of Comecon in his book *Gegenseitige Wirtschaftshilfe?: Die DDR im RGW – Strukturen und handelspolitische Strategien 1963 – 1976* (Cologne, 2000), 155. The Leipzig fair in 1966 displayed 23 truck models produced in the Eastern Bloc – see *Verkehrspraktiker*, no. 3 (1966): 21.

[12] *OSShD-Journal*, no. 3 (1959): 22.

[13] Siegfried Karbaum, 'Kraftverkehr und Außenhandel in Ungarn', *Verkehrspraktiker*, no. 6 (1966): 37.

[14] Richard Vahrenkamp, *The Logistic Revolution –The Rise of Logistics in the Mass Consumption Society* (Cologne 2012), 190.

[15] Ibid., 84.

[16] Herbert Krunau, 'Kraftverkehr und Bauwesen. Zur Auswertung eines Erfahrungsaustausches in Moskau', *Der Verkehrspraktiker*, no. 3 (1960): 14; Erwin Kramer, 'Für ein einheitliches sozialistisches Verkehrswesen', *Verkehrspraktiker*, no. 4 (1960): 6-12.

[17] Hydassi, 'Trucking' (n. 8 above), 13; Schejnin, 'Einführung neuer Technik im Kraftverkehr in der RSFSR', *OSShD-Journal*, no. 2 (1961): 7-19; *OSShD-Journal*, no. 4 (1960): 21.

[18] Up to 1953 the Soviet Union had numerous ministries – for example, one for cotton farming – see *Ost-Probleme*, no. 13 (1953): 544. An account on the council of ministers in 1962 is given in *Ost-Probleme*, no. 7 (1962): 220-221.

[20] Gunther Fechner, 'Einführung der Wagenladungsknotenbahnhöfe in der UDSSR', *DDR Verkehr*, 1:4 (1968): 139.
[21] Hydassi, 'Trucking' (n. 8 above).
[22] H. Lieber, 'Der Aufbau der Binnenspedition in der VR Polen', *Der Verkehrspraktiker*, 8:5 (1964): 14-18.
[23] Mieczkowski, *Transportation in East Europe* (n. 8 above), 298; Tamas Fleischer, 'Infrastruktúra-fejlesztési csapdák', *Közgazdasági Szeml*, 33:2 (1986): 150-161 and table one (Traps in Infrastructural Development), with English translation provided by Tamas Fleischer).
[24] Andrei Yudanov, 'Large Enterprises in the USSR – The Functional Disorder', in *Big Business and the Wealth of Nations*, eds. Alfred Chandler, Franco Amatori, and Takashi Hikino (Cambridge, MA, 1999), 417.
[25] A. Gajkowicz, 'Hauptaufgaben des Strassenwesens in der polnischen Volksrepublik', *OSShD-Journal*, no. 4 (1959): 6-7; *OSShD-Journal*, no. 5 (1960): 22.
[26] The case to consolidate car fleets is described by Siegelbaum, 'Cars' (n. 8 above), 244.
[27] Nikita Chruschtschow, *Rechenschaftsbericht des Zentralkomitees der KPdSU an den 20. Parteitag*, (Berlin, 1956), 60.
[28] Chandler (n.2 above, 1990) stated on page 22 that in such labour-intensive manufacturing industries as apparel, textiles, lumber, furniture and printing, the decrease in unit costs was only marginal.
[29] For the USSR, see Andrei Yudanov: 'Large Enterprises' (n. 29 above); Helmut Fleischer, ed., *Short Handbook of Communist Ideology: Synopsis of the Osnovy Marksizma-Leninizma* (Dordrecht, 1965). *Osnovy marksizma-leninizma* was published 1960 in Moscow and was translated into nearly all European languages by the local national communist parties the German edition is *Grundlagen des Marxismus-Leninismus. Lehrbuch*, ed. Horst Ullrich (Berlin, 1960): 650-660.
[30] Herbert Krunau, 'Kraftverkehr und Bauwesen: Zur Auswertung eines Erfahrungsaustausches in Moskau', *Der Verkehrspraktiker*, 3:3 (1960):10-14; Inbert Gobermann, 'Zur Reorganisation des Kraftverkehrs in Moskau', *Der Verkehrspraktiker*, 2:6 (1959): 15-17; Wolfgang Bober, 'Werkverkehr und gewerblicher Güterverkehr in der UDSSR', *Der Verkehrspraktiker*, 1:2 (1958): 13-15. Whether the outsourcing in Moscow resulted in a deterioration of transport services remains unknown and is left to further research.
[31] Krunau, 'Kraftverkehr und Bauwesen', p. 11;. Gobermann, 'Zur Reorganisation des Kraftverkehrs in Moskau', p. 16; Bober, 'Werkverkehr und gewerblicher Güterverkehr in der UDSSR', p. 14.
[32] Gobermann, 'Zur Reorganisation des Kraftverkehrs in Moskau', p. 17.
[33] Vahrenkamp, 'Revolution', (n. 14 above), 98. The traffic jam at railway cargo terminals in Germany in the 1920s is shown in Richard Vahrenkamp, 'The limits of railway transportation in a mass consumption society: Germany, 1900-1938', *Journal of Transport History*, 32: 1 (2011): 1-16.
[34] Tamas Fleischer put forward this argument in the case of Hungary. See his paper (n. 23 above), English translation provided by Tamas Fleischer, p. 5. That capacity utilisation rises with the length of a queue is known in traffic science and production theory – see Ravi Ravindran, *Operations Research and Management Science Handbook* (Boca Raton, 2008), ch. 9 on queuing theory.
[35] Bober, 'Kraftverkehr und Bauwesen' (n. 30 above), 14; Gobermann, 'Zur Reorganisation des Kraftverkehrs in Moskau' (n. 30 above), 15.
[36] Krunau, 'Kraftverkehr und Bauwesen' (n. 30 above), 14.
[37] Ibid., 12.
[38] Gobermann, 'Zur Reorganisation des Kraftverkehrs in Moskau' (n. 30 above), 16.
[39] F. Kalabuchow, 'Der öffentliche Kraftverkehr in der RSFSR', *OSShD-Journal*, no. 4 (1960): 9-10.
[40] O. Smirnow, 'Einige Erfahrungen über den zentralisierter Strassengütertransport im Fernverkehr nach einer neuen Methode', *OSShD-Journal*, no. 3 (1960): 12-14.
[41] Ibid., 14. L. Tschernjawsk, 'Organisation der Güterbeförderung im Kraftverkehr', *Der Verkehrspraktiker*, no. 4 (1966), 19.
[42] Siegfried Nobis, 'Bis 1965 sind 47 Tausend Tonnen Laderaum umzusetzen', *Der Verkehrspraktiker*, no. 2, (1960): 5.
[43] Axel Dossmann, *Begrenzte Mobilität – eine Kulturgeschichte der Autobahnen in der DDR*, (Essen, 2003); Richard Vahrenkamp: *The German Autobahn 1920 – 1945: Hafraba Visions and Mega Projects*, (Cologne 2010).

[44] Hans Bremer, 'Grundfragen des Guterkraftverkehrs bei der weiteren Entwicklung des gesellschaftlichen Systems des Sozialismus in der DDR', in *Ökonomische Probleme im Güterkraftverkehr*, ed., VEB Guterkraftverkehr Potsdam (Potsdam, 1968): 9; Rosemarie Schneider, 'Das Verkehrswesen' (n. 2 above), 182.
[45] Vahrenkamp, '*Logistic Revolution'* (n. 14 above).
[46] Siegfried Gatsch, 'Der Stückgut Knotenverkehr – Stand und Perspektiven', *DDR Verkehr*, (1971): 59-64; Walter Hammer, 'Drei Jahre Containerverkehr in der DDR', *DDR Verkehr*, (1971): 224-226. Archival sources report on the lack of electrical batteries for forklifts.
[47] Christopher Kopper, '*Deutsche Reichsbahn'* (n. 2 above): 313. The railway did not depend on oil, but got its power by an electrical network generated by local low grade coal (lignite).
[48] VEB means owned by the state ('volkseigener Betrieb').
[49] Siegfried Nobis, 'Bis 1965 sind 47 Tausend Tonnen Laderaum umzusetzen' (n. 42 above); Siegfried Nobis, 'Es ist notwendig, den Werkverkehr einzuschränken', *Der Verkehrspraktiker*, 2:6 (1959): 9-14; Otto Glum, 'Sozialistische Großbetriebe –Bestandteil der Rekonstruktion im Kraftverkehr', *Der Verkehrspraktiker*, 2:3 (1959): 7-11:. Volkmar Winkler, 'Über die Zweckmäßigkeit des Werkverkehrs', *Der Verkehrspraktiker* , 1:3 (1958): 4-9.
[50] VEB Guterkraftverkehr Berlin, *Maßnahmen zur Sicherung der Planerfüllung 1961 on 30 March 1961*, in State Archive Berlin, file Rep. 114/344; Richard Vahrenkamp, 'The dream of large-scale truck transport enterprises – early outsourcing experiments in the German Democratic Republic, 1955 – 1980', *Journal of Transport History*, 36:1 (2015): 1-21.
[51] Krueger, Karl, *Der Ostblock*, vol. 1, (Berlin 1961): 157-160; Mieczkowski, *Transportation in East Europe* (n.3 above), 298; Dossmann, *Begrenzte Mobilität* (n. 43 above), describes the construction of the motorway Berlin-Rostock in the GDR.
[52] Jiří Kosta, *Die tschechische/tschechoslowakische Wirtschaft im mehrfachen Wandel* (Frankfurt a.M. 2005), 100. The construction performance in the basic industries of the Eastern Bloc fascinated many observers. As late as 1974, U.S. historian of technology Thomas Hughes, drawing on propaganda material of the Soviet Union, enthused about the supposedly better adjustment of the Soviet Union's electricity daily load curve compared to the German network in the 1920s – see Thomas Hughes, 'Technology as a Force for Change in History: The Effort to Form a Unified Electric Power System in Weimar Germany', in *Industrielles System und politische Entwicklung in der Weimarer Republik*, eds., Hans Mommsen, et al. (Düsseldorf 1974), 155. A critique on the Soviet Union's electric power policy can be found in Klaus Gestaw, *Die stalinschen Grossbauten des Kommunismus* (Munich 2010).
[53] Jonathan Zatlin, 'The Vehicle of Desire: The Trabant, the Wartburg and the End of the GDR', *German History*, 15 (1996): 369. See also Jonathan Zatlin, *The Currency of Socialism*, (Cambridge, MA,2007), in which Zatlin argues that the totally inadequate supply of motor vehicles destroyed public confidence in the economic policies of the SED and contributed significantly to the demise of the GDR. For the construction of new GDR Autobahn lines, see Dossmann, *Begrenzte Mobilität* (n. 43 above).
[54] Valentina Fava, 'The Elusive People's Car: Imagined Automobility and Productive Practices along the "Czechosslovak Road to Socialism"', in '*Socialist Car'*, ed. Siegelbaum (n. 3 above), 28.
[55] Marius Jastrzab, 'Cars as Favors in Poeple's Poland', in '*Socialist Car'*, ed. Siegelbaum (n. 3 above), 20-46.
[56] György Peteri, 'Alternative Modernity? Everyday practices of Elite Mobility in Communist Hungary, 1956- 1980', in '*Socialist Car'*, ed. Siegelbaum (n. 3 above), 47-70.
[57] Siegelbaum, *Cars for Comrades* (n. 3 above), 219.
[58] About the lack of car culture in Russia see documents to the 27th Congress of the CPSU, p. 227.
[59] Tamas Fleischer, 'Infrastruktúra-fejlesztési csapdák' (n. 23 above).
[60] *Dokumente zum 27. Parteitag der KPdSU*, German edition (Moscow, 1986), 227; Lewis Siegelbaum, *Cars for Comrades*, (n. 2 above), ch. 4; Siegelbaum, 'Roadlessness and the path to communism' (n. 3 above).
[61] Rosemarie Schneider, 'Das Verkehrswesen' (n. 2 above), 201.
[62] Ibid., 203.
[63] Mikhail Gorbachev, *Politischer Bericht des Zentralkomitees der KPdSU an den 27. Congress of the CPSU*, German edition (Moscow, 1986), p. 51.
[64] ABI-Bericht Verbesserung des Stückguttransports on 25 April 1978, Federal Archive Berlin, file DM 1/9949.
[65] Zygmund Berman and Claes G. Alvstam, 'Investment Policy in the Polish Transport Sector', *Transport and the Economic Development – Soviet Union and Eastern Europe*, eds., Johannes S. Tismer, John Ambler and Leslie Simons (Berlin 1987), 345.